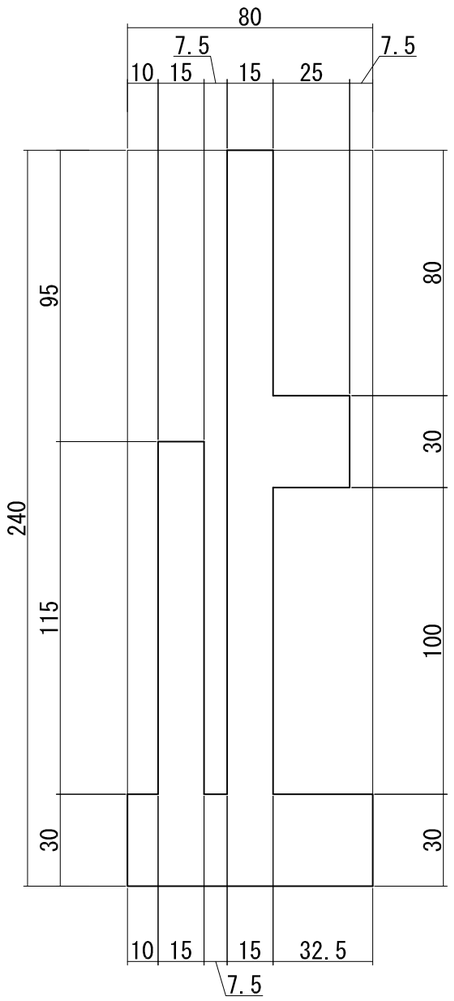

L15	5.35m

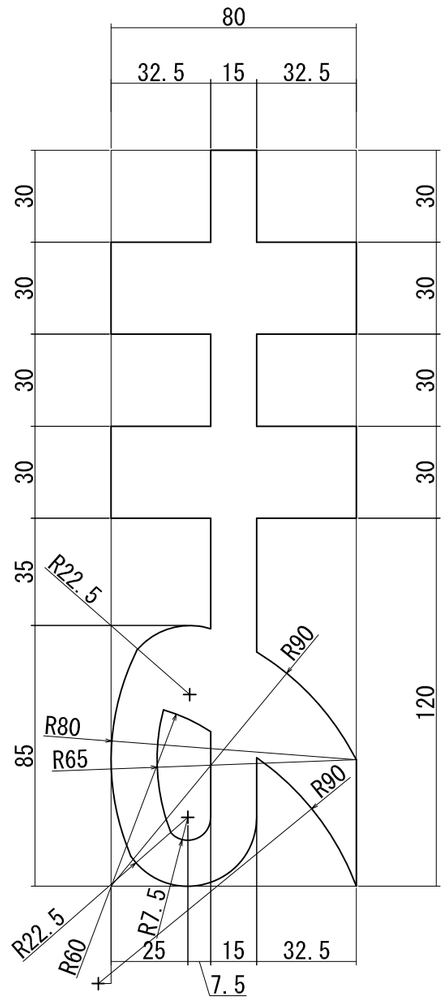

L15	6.92m

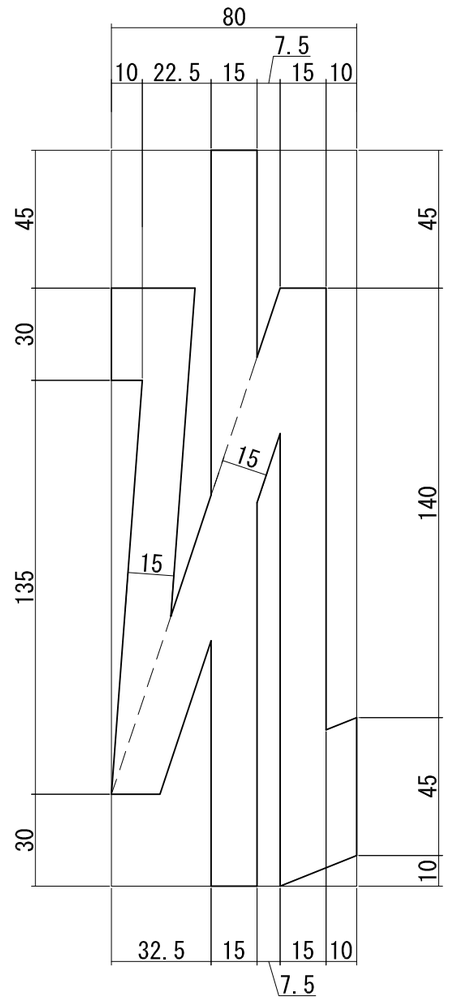

L15	7.33m

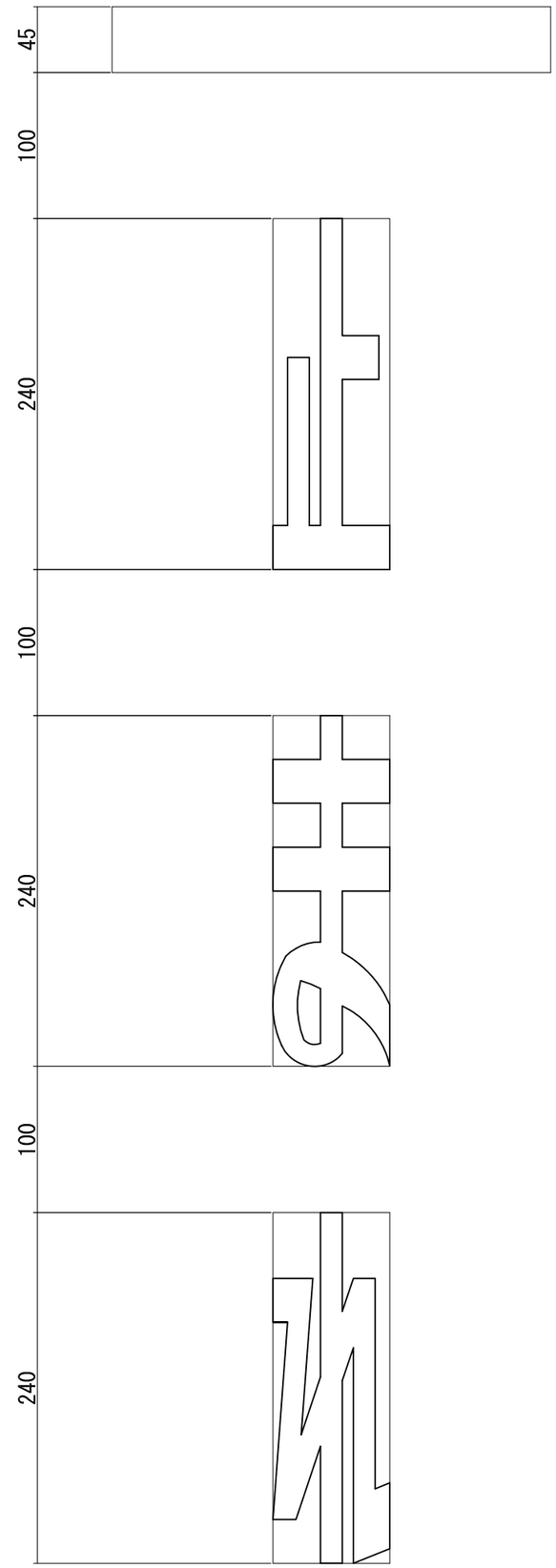

L15	19.60m